Model 1830CS & 1850CS Dehumidifier

Installation and Operation Manual

SAFETY INSTRUCTIONS

⚠ WARNING

1. 120 Volts may cause serious injury from electric shock. Disconnect electrical power before starting installation or servicing. Leave power disconnected until installation/service is completed.
2. Sharp edges may cause serious injury from cuts. Use care when cutting plenum openings and handling duct work.
3. Dropping may cause personal injury or equipment damage. Handle with care and follow installation instructions.

⚠ CAUTION

1. Read all instructions before beginning installation.
2. Improper installation may cause property damage or injury. Installation, service, and maintenance must be performed by a qualified service technician.
3. Do not use in pool applications. Pool chemicals can damage the dehumidifier.
4. Do not use solvents or cleaners on or near the circuit board. Chemicals can damage circuit board components.
5. Wait 24 hours before running the unit if it was not shipped or stored in the upright position

READ AND SAVE THESE INSTRUCTIONS

TABLE OF CONTENTS

Safety Instructions . . . 1

Specifications . . . 2

Set Up Dehumidifier for Installation . . . 3
- Packaging Content . . . 3
- Duct Collars . . . 4
- Control Location . . . 4

Location Considerations . . . 5

Installation . . . 5
- Leveling . . . 5
- Ductwork Installation . . . 5
- Drain Tubing and Condensate Pump Installation . . . 6
- Float Switch Wiring . . . 6
- Alert Light Mounting . . . 6

Model 76 – Crawl Space Control and Wiring . . . 7

System Set-Up, Check & Start-Up . . . 7
- System Set-Up . . . 7
- System Check . . . 7
- Start-Up . . . 8

High Dew Point / High Humidity Alert . . . 8

Troubleshooting . . . 8
- Table 2 – Error Codes . . . 9
- Table 3 – Troubleshooting Guide . . . 10

Service Parts . . . 11

SPECIFICATIONS

	Model 1830CS	Model 1850CS
Weight	67 lbs.	70 lbs.
Capacity 80°F, 60% RH Conditions	70 pints per day @ 160 CFM	95 pints per day @ 245 CFM
Power 115 VAC, Single Phase, 60Hz	6.3 Amps operating current	8 Amps operating current
Dehumidifier Inlet Air Conditions	Dehumidification: 50°F – 104°F, 40°F dew point minimum Ventilation: 40°F – 140°F, 0%RH – 99%RH (non-condensing)	
Filter	MERV 8, washable	
Airflow	160 CFM	245 CFM

SET UP DEHUMIDIFIER FOR INSTALLATION

⚠ IMPORTANT: Cut the strap securing the compressor shipping support bracket and remove the strap and shipping bracket. See **Figure 1**.

⚠ IMPORTANT: Remove the ALERT LIGHT and FLOAT Switch cables from around the duct collar.

PACKAGING CONTENT

1. Dehumidifier

2. Inlet/Outlet Collars

3. Literature
- **a.** Installation Instructions
- **b.** Owner's Manual

4. Parts Bag
- **a**. #8 x 3/8 Screw (1)
- **b.** #10 x 1/2 Screws (9)
- **c.** Wire Nut (2)
- **d.** Bracket for Alert Light (1)
- **e.** Plastic Staples (6)
- **f.** Barbed Fitting & Reducer for Drain Connections
- **g.** Torx Bit

FIGURE 1 – Remove Shipping Bracket

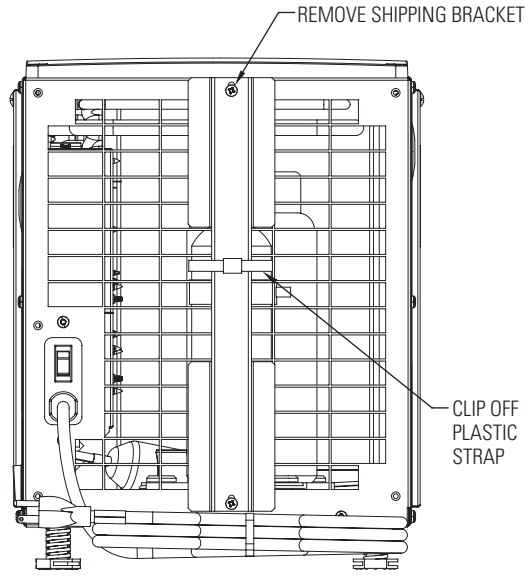

Remove the wire access cover. Plug the 4-terminal block connected to the ALERT LIGHT cable into the pins labeled + – A B and the remaining 2-terminal block from the cable into the pins labeled ALERT. See **Figure 2**.

FIGURE 2 – Float Switch and Alert Light Wiring

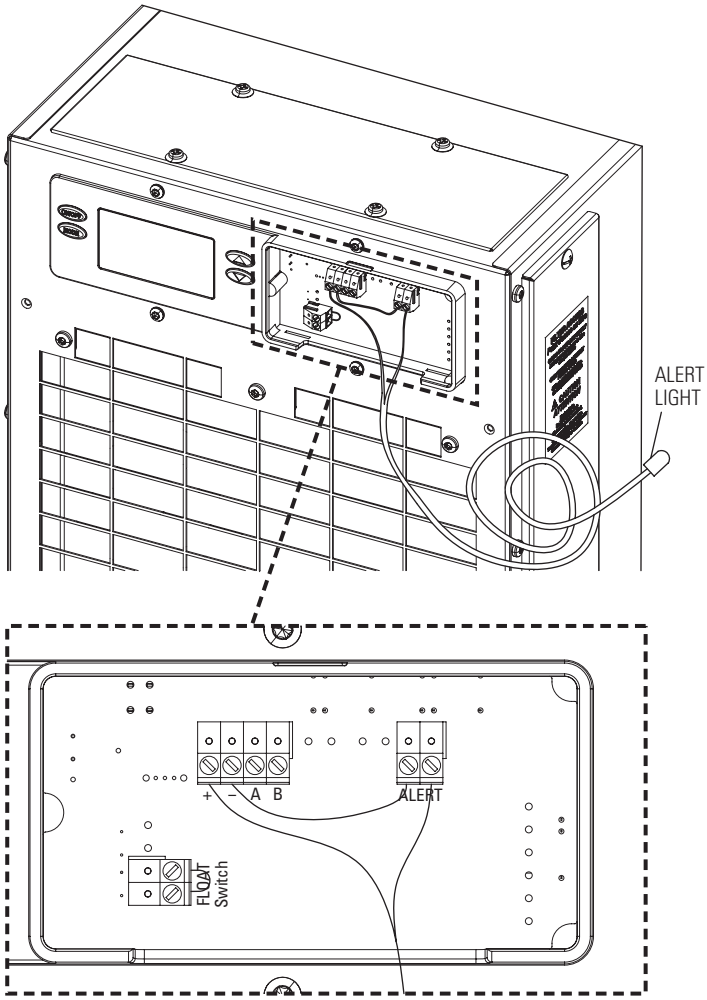

DUCT COLLARS

Use the screws in the parts bag to attach the duct collars to the inlet and outlet of the dehumidifier. The outlet collar has a backflow damper. See **Figure 3**.

FIGURE 3 – Install Duct Collars

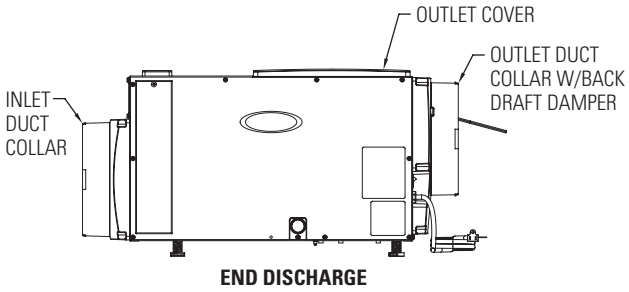

CONTROL LOCATION

The on-board control, located on the front of the dehumidifier, can be relocated to the top of the dehumidifier if the control can not be seen/accessed in the front orientation.

To move the control:

1. Remove the top control panel cover.
2. Remove the filter access door and filter.
3. Detach the on-board control by removing the four (4) screws around the control. **NOTE:** Use one hand to support the back of the on-board control when removing.
4. Keep the control in the unit and relocate to the top access hole.
5. Secure the control with the same four screws used to attach the control to the front of the unit.
6. Secure the control panel cover to the front of the unit.

FIGURE 4 – Control Location

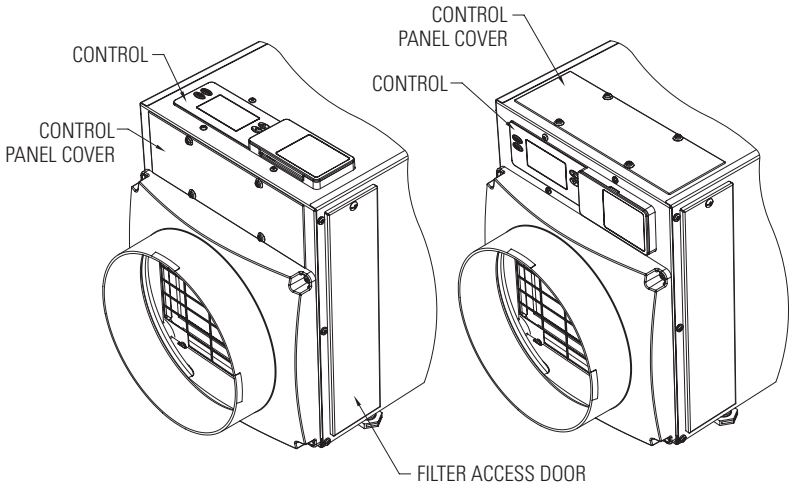

LOCATION CONSIDERATIONS

- Allow sufficient clearance for filter removal and to prevent airflow obstruction
- Electrical service access will require the removal of the side panel shown. Allow sufficient space for service on this side of the unit.

FIGURE 5 – Filter Access Clearance

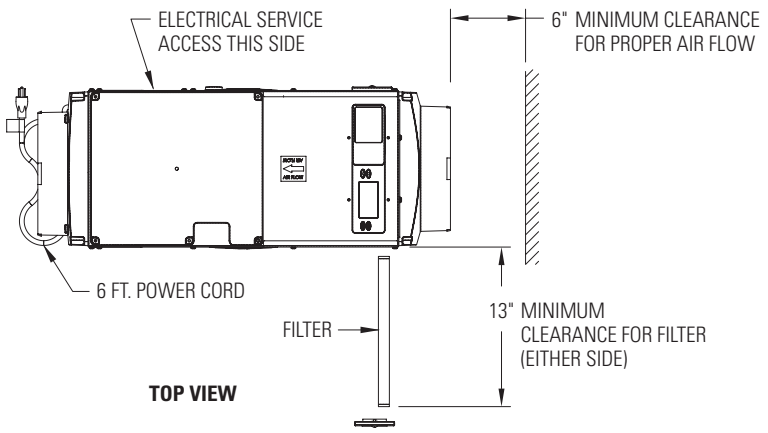

90-1840

INSTALLATION

LEVELING

The feet can be adjusted to level the unit, and if required, to accommodate drain fittings and a secondary condensate pan. **Leveling is required** to ensure proper drainage from the dehumidifier. See **Figure 6**.

FIGURE 6 – Level the Unit

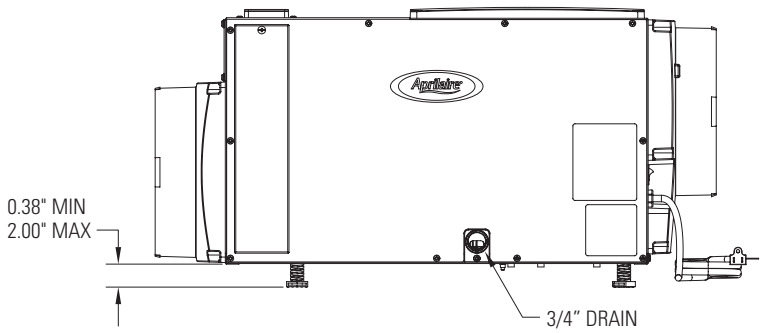

90-1885

DUCTWORK INSTALLATION

Adding 5-10 feet of insulated ductwork to the inlet and outlet of the dehumidifier will ensure dehumidified air is circulated throughout the crawl space and will reduce the noise level of the dehumidifier. Point the inlet and outlet ducts in opposite directions to minimize recirculation of dehumidified air.

- Make sure there are no bends in the ductwork coming off the outlet for a minimum of 4". This will ensure that the ductwork will not interfere with the backflow damper function.
- Maximum recommended total duct length is 100 feet.
- To avoid pulling in dirt and other particles, do not lay intake duct on the floor of the crawl space.

DRAIN TUBING AND CONDENSATE PUMP INSTALLATION

The drain outlet on the dehumidifier can be plumbed directly to a condensate pump (see **Figure 7**) using the provided fitting and 1/2" clear PVC tubing. Always maintain a constant downward slope from the dehumidifier to the condensate pump. The 4856 condensate pump is capable of lifting water up to 22 feet. Always use PVC primer and cement when connecting PVC drain line or the provided fitting to the dehumidifier drain outlet. **NOTE:** Dehumidifier can be elevated (while remaining level) to increase downward slope for proper draining.

FIGURE 7 – Drain and Condensate Pump Installation

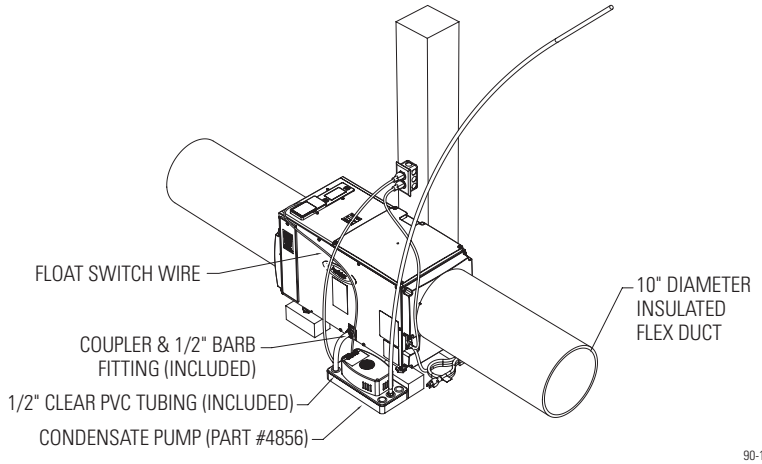

FLOAT SWITCH WIRING

If using a condensate pump, remove the factory installed jumper wire between the FLOAT SWITCH terminals on the control, and wire the float switch terminals to the normally closed contacts on the condensate pump or float switch. See **Figure 8**.

FIGURE 8 – Float Switch Wiring

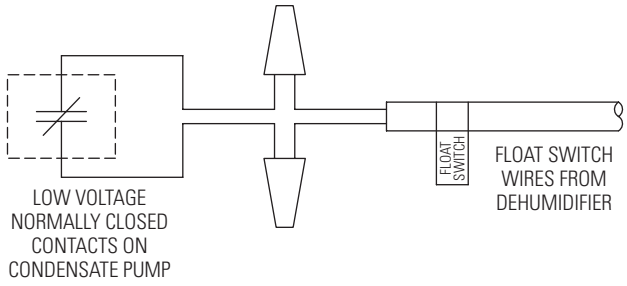

ALERT LIGHT MOUNTING

1. Locate the alert light mounting bracket where it will be readily visible.
2. Run the ALERT LIGHT to the mounting bracket and clip it in the bracket as shown in **Figure 9**. Use the provided plastic wire staples to secure the wire in place.

NOTE: The alert light does not need to be installed for the unit to function.

FIGURE 9 – Alert Light Mounting

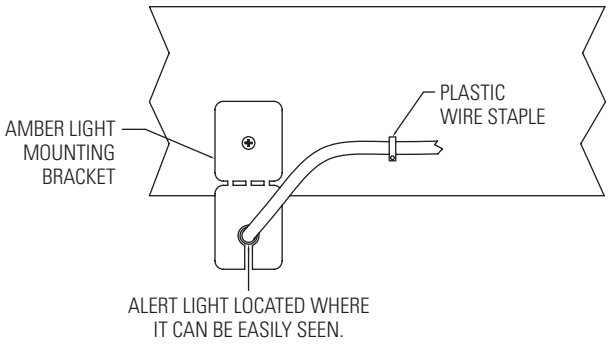

MODEL 76 – CRAWL SPACE CONTROL AND WIRING

NOTE: Use 18-22 AWG wire for control wiring.

CRAWL SPACE CONTROL

Used as crawl space control (or remote control), the Model 76 is mounted in the living space while the dehumidifier is located in the crawl space. When the dehumidifier is powered, the display on the dehumidifier control will show "REMOTE" to indicate that a remote control is being used. The RH shown on the Model 76 is the RH measured at the dehumidifier.

FIGURE 10 – Model 76 Crawl Space (Remote) Wiring

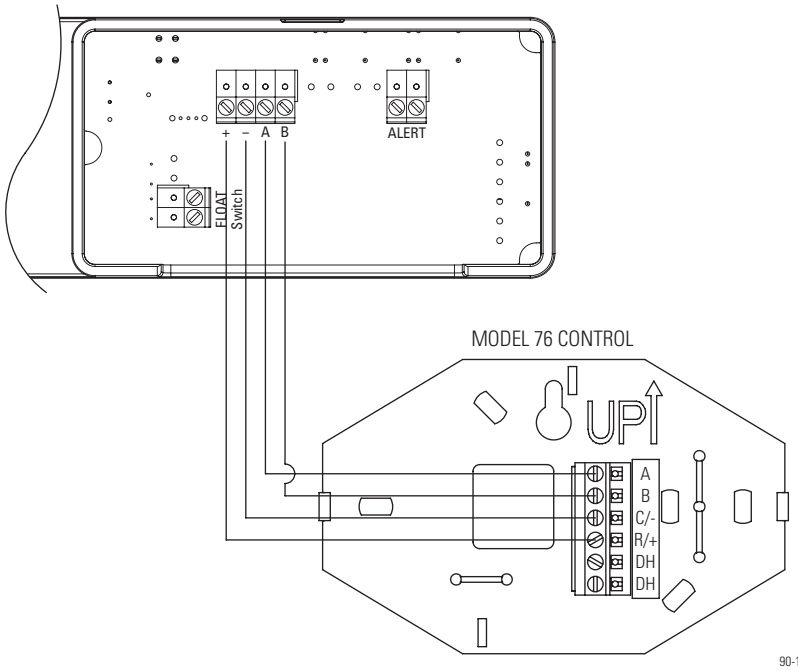

SYSTEM SET-UP, CHECK & START-UP

SYSTEM SET-UP

Dehumidifier can be controlled by setting the desired dew point or relative humidity (%RH) limit. The default control method is dew point.

1. Check all wiring.

2. Make sure the wire access cover has been snapped back onto the on-board control.

3. Plug unit in and turn power switch to ON.

4. The on-board control screen should display OFF.

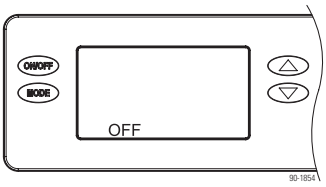

NOTE: If the display backlight is not on, the first button press (any button) will only turn on the backlight. Press the button a second time to achieve function.

If controlling by dew point and using the on-board control, proceed to **SYSTEM CHECK** section.

5. Hold the MODE button on the on-board control for 3 seconds to enter the Installer Set-up Menu.

6. Use the UP or DOWN arrows to select and use MODE to switch to the next set-up screen. To exit installer set-up, all options must be scrolled through using the MODE button.

%RH Control

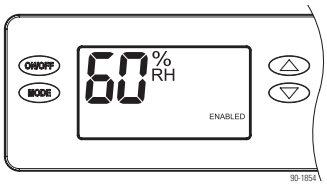

If the preferred setting and control method is relative humidity (%RH), select %RH ENABLED. Press MODE to complete Set-up Menu.

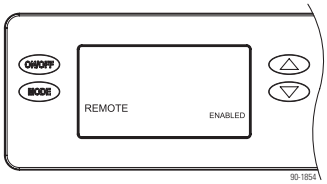

If installing in a crawl space with remote control, press the up or down button to enable, and then press MODE. The installer set-up is complete, proceed to **SYSTEM CHECK** section.

7. After the installer set up options have been completed, DONE will blink for 3 seconds and the control will return to the OFF screen.

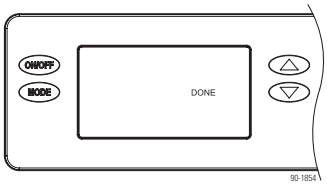

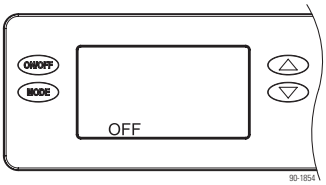

SYSTEM CHECK

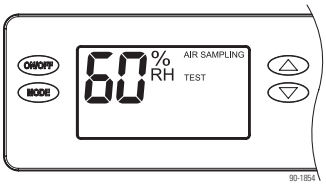

Press and hold the ON/OFF button and MODE buttons for 3 seconds. The measured humidity, AIR SAMPLING and TEST will show on the display. The ALERT LIGHT will turn on and stay on until the system check is "DONE".

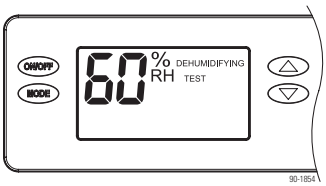

After three (3) minutes the dehumidifier compressor will turn on and DEHUMIDIFYING will replace AIR SAMPLING on the control screen.

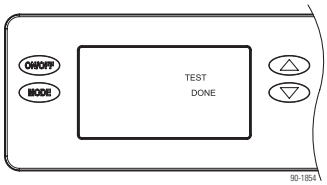

After one minute of compressor operation, all outputs will turn off and DONE will blink for 3 seconds and then return to the OFF screen.

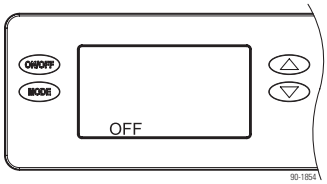

START-UP

1. Press the ON/OFF button to turn the dehumidifier control ON. The display will show the current dew point or %RH setting, and the dehumidifier blower will turn on to start sampling the air.

"AIR SAMPLING" will show on the display.

2. Use the UP or DOWN button to adjust the dew point setting or %RH setting as desired. The recommended initial setting is 3 using dew point control or 59%RH, for preservation and preventing condensation on floor joists. See **Table 1**.

3. After three (3) minutes of sampling, the measured dew point or %RH will be compared to the setting:

a. If the dew point is above the setting or above the %RH setting, the dehumidifier compressor turns on and "AIR SAMPLING" will be replaced by "DEHUMIDIFYING". The compressor remains on until the measured dew point falls below the setting or measured %RH falls 3% below the setting.

b. If the dew point or %RH is below the setting, the blowers turn off and the display returns to showing the setting.

4. The dehumidifier will sample again every 60 minutes, or at any time if the humidity setting is lowered.

NOTE: For Start-Up when using a Model 76 Control, reference the Model 76 Installation Instructions.

TABLE 1 – %RH (+/- 5%) Based on Dryness Setting and Crawl Space Temperature

Dryness Setting & Dew Point	Crawl Space Temperature		
	60°F	65°F	70°F
1 – Less, 65°F DP			84%
2 – 61°F DP		87%	73%
3 – Normal, 57°F DP	90%	75%	63%
4 – Normal, 53°F DP	78%	65%	55%
5 – Normal, 49°F DP	67%	56%	47%
6 – 46°F DP	60%	50%	42%
7 – Most Dry, 42°F DP	51%	43%	36%

EXAMPLE: At a crawl space temperature of **70°F** and a dryness level setting of **3 (57°F DP)**, the dehumidifier will work to achieve a **63%** relative humidity level.

- The %RH values are +/- 5% and are to be used as a GUIDE ONLY.
- The crawl space temperature is measured at the dehumidifier inlet.

Your dehumidifier is equipped with two features that protect against unwanted energy consumption. Defrost is a normal operating mode that helps to prevent significant ice formation on the refrigeration system coil. The dehumidifier display will show "DEFROSTING" when operating in this mode. This mode can occur when there is not enough air moving through the dehumidifier or if the temperature and/or humidity of the incoming air is too low. The second protection feature is the E8 code. E8 on the dehumidifier display indicates that the air entering the dehumidifier is below 50°F or above 104°F, or the dew point of the incoming air is below 40°F. There would be a significant reduction in dehumidifier efficiency if the dehumidifier operated outside of these conditions. Low dew point conditions can be seen in some basements or crawl spaces and usually occur in the Winter and Spring months. The dehumidifier continues to monitor the incoming air and when the conditions are within the operating range, E8 will be removed from the display and dehumidification will begin as needed.

HIGH DEW POINT / HIGH HUMIDITY ALERT

If the dehumidifier measures the dew point of the air to be 4°F or more or 6%RH or more above the setting for 72 consecutive hours, the ALERT LIGHT will turn on and the display will show "HI". The dehumidifier will continue to operate as normal when the ALERT LIGHT is on. If the dew point falls within 4°F of the setting or relative humidity falls within 6%RH of the setting, the ALERT LIGHT will turn off.

The dehumidifier measures the conditions of the incoming air every five (5) minutes even if the dehumidifier is turned off (using the ON/OFF button) to determine if there is a high dew or humidity condition. Should the dehumidifier be turned off, the alert setting defaults to 57°F or 60%RH.

TROUBLESHOOTING

Technical Support is available Monday through Friday, 7:00 a.m. to 5:00 p.m. CST, at (800) 334-6011. Use the guides on the following pages to identify and correct system faults. Contact Technical Support before replacing the unit or any components and for additional troubleshooting.

DIAGNOSTIC CODES

When an error occurs, the Diagnostic Code along with SERVICE REQUIRED will be displayed on the control screen. The ALERT LIGHT will turn on when an error occurs.

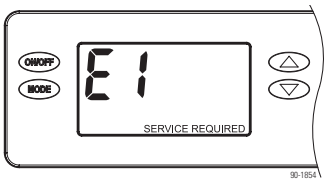

TABLE 2 – Diagnostic Codes

Diagnostic Code	Failure Mode	Action	Reset
E1	Internal Humidity or Temperature Sensor Open or Shorted	1. Check the connection between the sensor board and control board. 2. If connection okay, replace sensor board, Part No. 5460.	Cycle Power
E2	High Refrigeration Pressure	1. Verify that the fan works, the backflow damper swings freely and there is no blocked or restricted ductwork. 2. If the fault persists, call Technical Support.	Cycle Power
E3	Model 76 Remote Control Communication Loss	1. Check connections between Model 76 and dehumidifier control board. Terminals should be fully inserted and secured in the control board and Model 76 control terminals. 2. If connections are correct and secure, turn off the dehumidifier and remove the Model 76. Use a short section of 4-wire cable to reconnect the Model 76 to the control board. Turn the dehumidifier back on and increase the dryness level setting on the Model 76. If the dehumidifier turns on, the problem is with the wiring between the dehumidifier and control. 3. If the dehumidifier does not turn on, call Technical Support.	Self-Correcting
E4	Insufficient Capacity	1. Check the frost sensor connection at the power board. Terminal should be fully seated on the power board pins. 2. Remove the side access panel and verify that the sensor is secured to the suction line. 3. If the sensor is connected and secured to the refrigeration line proceed to the next step. 4. Reset the fault by cycling power to the dehumidifier. 5. Turn the humidity setting down (below room/home humidity level) to make a dehumidification call. 6. Allow the fan and compressor to run for approximately 10-15 minutes and then enter diagnostic test mode by simultaneously pressing the UP ARROW and MODE buttons for 3 seconds. The LCD will display the temperature measured by the internal sensor while also displaying AIR SAMPLING and ON, the humidity measured by the internal sensor while also displaying %RH and ON, and the frost sensor temperature while also displaying ON. Scroll through these values and by using the UP/DOWN arrow buttons. 7. Record values and call Technical Support.	Cycle Power
E5	High Temperature Thermistor Failure	1. Check the high temperature sensor connection at the power board. Terminal should be fully seated on the power board pins. 2. Remove the side access panel and verify the sensor is not damaged and connected to the refrigeration line coming from the compressor. 3. If the sensor is connected and secured to the refrigeration line, contact Technical Support.	Cycle Power

TABLE 2 – Diagnostic Codes

Diagnostic Code	Failure Mode	Action	Reset
E6	Low Temperature Thermistor Failure	1. Check the low temperature sensor connection at the power board. 2. Remove the side access panel and verify the sensor is not damaged and connected to the suction line. 3. If the sensor is connected and secured to the refrigeration line, contact Technical Support.	Cycle Power
E7	Float Switch Open	1. Empty the condensate pan. 2. Check the float switch connection at the control board. 3. If not using a float switch, verify jumper is between float switch terminals on dehumidifier control board. 4. If the problem persists, replace the float switch.	Self-Correcting
E8	Inlet Air Temperature Out of Range 50°F – 104°F or dew point below 40°F	1. Verify all ductwork is properly sealed. 2. If no signs of leak points, contact Technical Support.	Self-Correcting
HI (E0)	High Dew Point (Hight Dew Point on Model 76)	1. Verify unit is functioning properly by checking self-correcting diagnostic codes. 2. If there has been an environmental event causing a spike in moisture/humidity, allow the dehumidifier to continue to run. 3. If the fault persists, contact Technical Support.	Self-Correcting

TABLE 3 – Troubleshooting Guide

Symptom	Possible Reason	Troubleshooting Procedure
Dehumidifier does not turn on/run.	No power to unit.	• Check that the dehumidifier is plugged in. • Check that the power switch is turned ON. • Check that the control is turned ON. • Check that the circuit breaker has not tripped.
Dehumidifier blower is running but with little or no airflow.	Pressure drop across dehumidifier is higher than 0.4"w.c. for Model 1830CS or 0.6"w.c. for Model 1850CS.	• Check dehumidifier air filter and wash or replace. • Check for blocked duct work and clear. • Verify that the outlet collar with backflow damper is installed on the outlet side of the dehumidifier. • Check if backflow damper is blocked or stuck and remove obstruction.
Dehumidifier blower is running but compressor is not.	Float switch open.	• If float switch installed, check connections at control board and empty condensate pan. • If no float switch installed check that the jumper is installed at the float switch terminals on the control board.
	Coil frosting.	• Lack of or reduced airflow. Check dehumidifier air filter and wash or replace. • Check for blocked duct work. • Inlet air conditions below 60°F. Increase the humidity setting.
	Inlet air temperature is outside of the 50°F – 104°F range or the dew point is below 40°F and there is a demand for dehumidification.	• Verify all ductwork is properly sealed.
Dehumidifier is not draining properly.	Drain line blocked or unit not level.	• Verify that the unit is level. • Check the drain line blockages and for a continuous downward slope.
Dehumidifier is producing hot air.	Normal function.	• Air is reheated across the condenser coil, resulting in a temperature rise between inlet and outlet, this is normal.

SERVICE PARTS

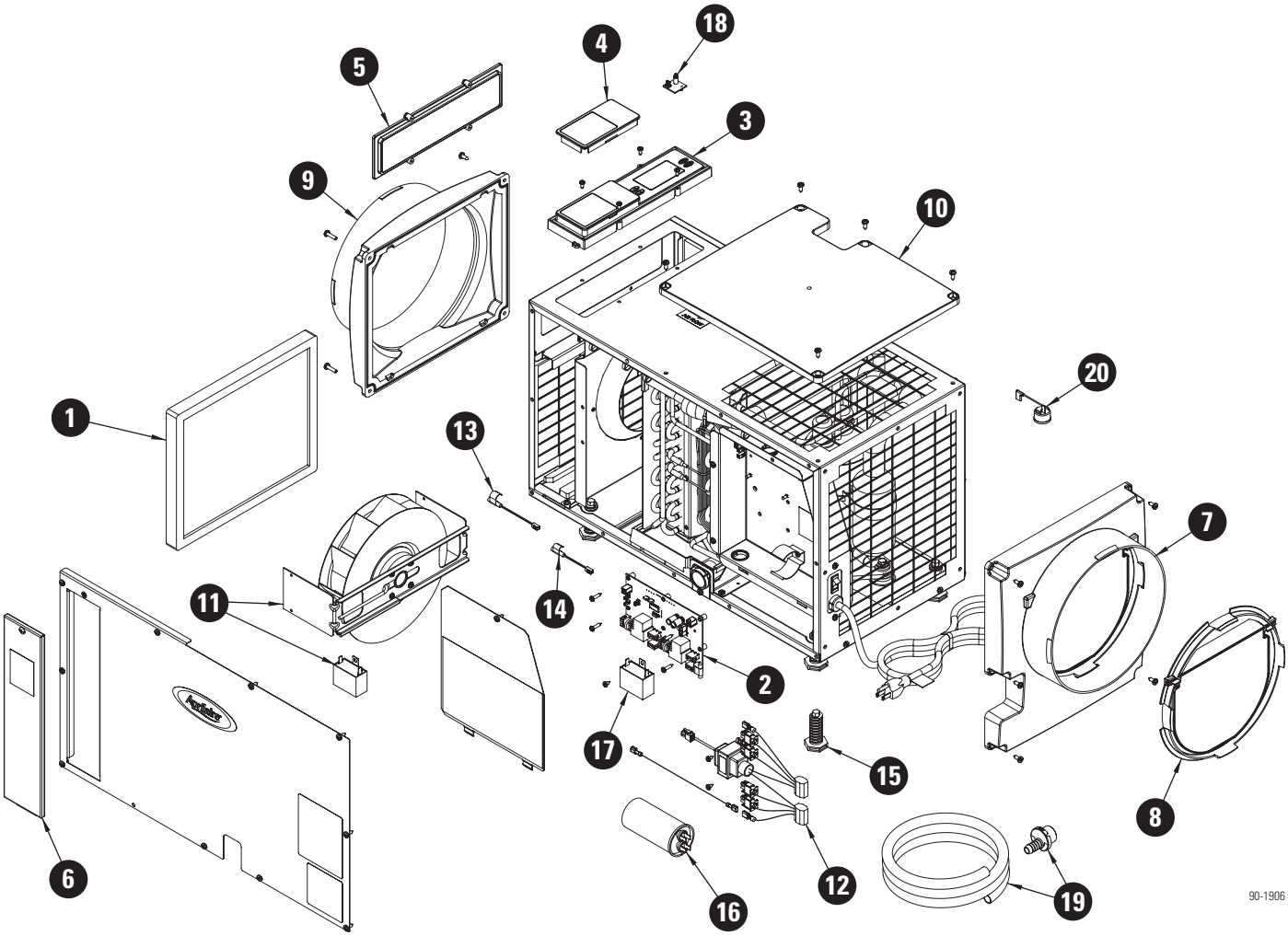

No.	Part Description	Part No.
1	Filter, 10" x 12" x 1" EZK	5443
2	Internal Control Board, Deh	5444
3	User Interface Assembly, Deh	5475
4	Wiring Access Door, AA Deh	5446
5	Hole Cover, UI Ctrl, Deh	5447
6	Door, Filter Access, AA Deh	5448
7	Outlet Duct Panel, Deh	5449
8	Backflow Damper, 10", Deh	5450
9	Inlet Duct Panel, AA Deh	5451
10	Cover, Outlet, AA Deh	5452
11	Fan, 70pt Deh, with 6MFD Capacitor	5453
	Fan, 95pt Deh, with 12MFD Capacitor	5467
12	Wire Harness, Power, Deh	5454
13	Sensor, Low Temperature, Deh	5455
14	Sensor, High Temperature, Deh	5456

No.	Part Description	Part No.
15	Leveling Foot, Deh	5457
16	Capacitor, 45MFD, 370VAC, 70pt/95pt Deh	5458
17	Capacitor, 8MFD, 450VAC, 70pt Deh, with Serial Number before 112015A09596	5459
	Capacitor, 6MFD, 250VAC, 70pt Deh, with Serial Number 112015A09596 or later	5582
	Capacitor, 12MFD, 450VAC, 95pt Deh	5468
18	RH Sensor, Deh	5460
19	Drain Tube + Fitting	5585
20	Compressor Overload Switch, 70pt Deh	5547
	Compressor Overload Switch, 95pt Deh	5548
Not Shown		
Alert Light with 40' of Cable		5427
Terminal Block, 4-Position		5589
Threaded Barbed Drain Fitting		5461
Condensate Pump with Tubing		4856

AprilairePartners.com
P.O. Box 1467
Madison, WI 53701-1467
800.334.6011 F: 608.257.4357
Printed in USA
©2019 **Aprilaire – Division of Research Products Corporation**
10011014 B2206466H 10.19